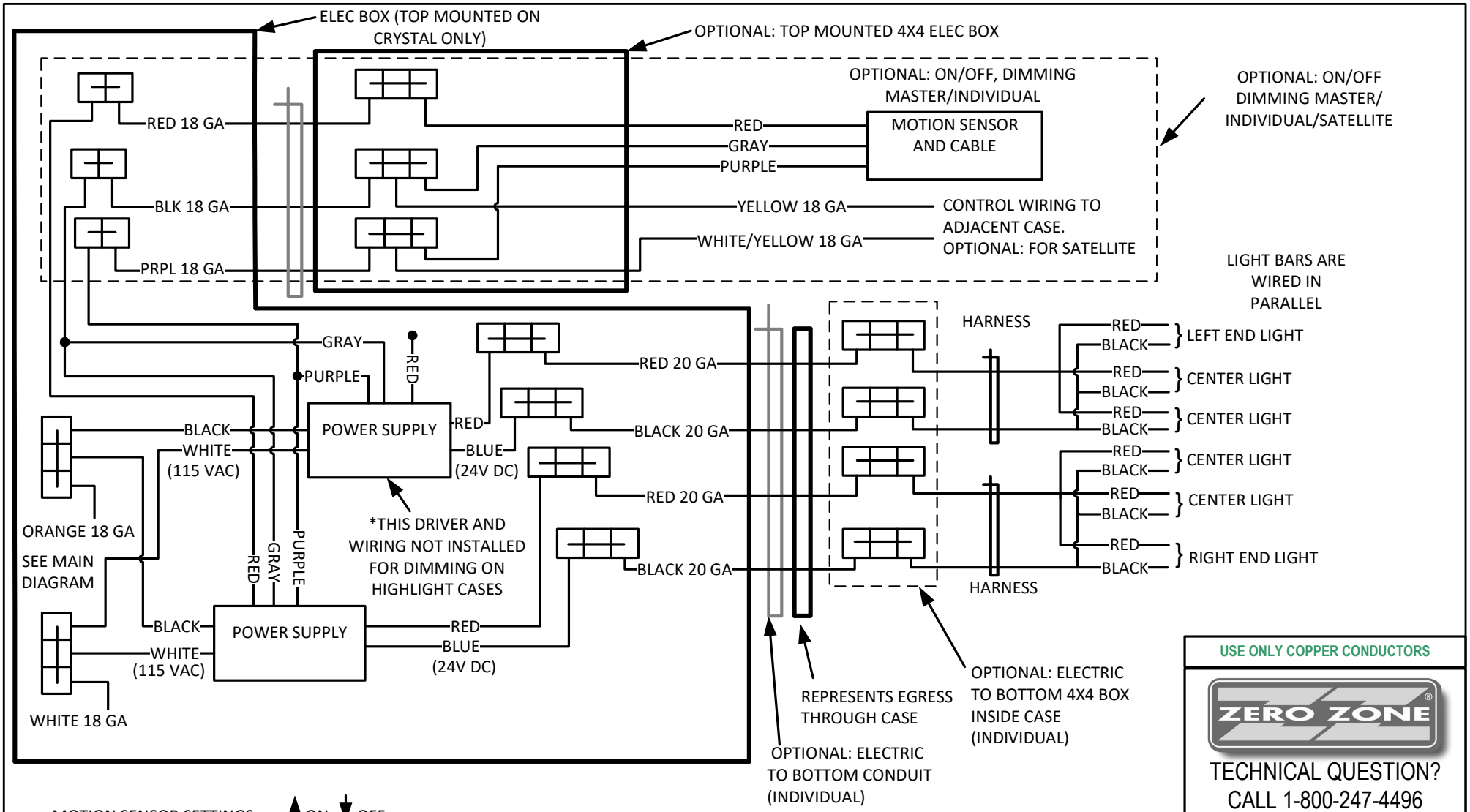

MOTION SENSOR SETTINGS: ↑ ON ↓ OFF

DIMMING LEVEL	1	2
0	ON	ON
10	ON	OFF
20	OFF	ON
50	OFF	OFF

TIMING DELAY	3	4
30 SECONDS	ON	ON
1 MINUTE	ON	OFF
2 MINUTE	OFF	ON
8 MINUTE	OFF	OFF

LIGHT SENSITIVITY	5
POOR	ON
GOOD	OFF

DIMMING ON/OFF	6
OFF	OFF
ACTIVATED	ON

USE ONLY COPPER CONDUCTORS

ZERO ZONE®

TECHNICAL QUESTION?
CALL 1-800-247-4496

MODEL No.

LABEL W/D AUX LIGHTING
5-DOOR VLC, VMC, HCC, HZC, ORMCD

DWG No. 65-1335-05 REV. F